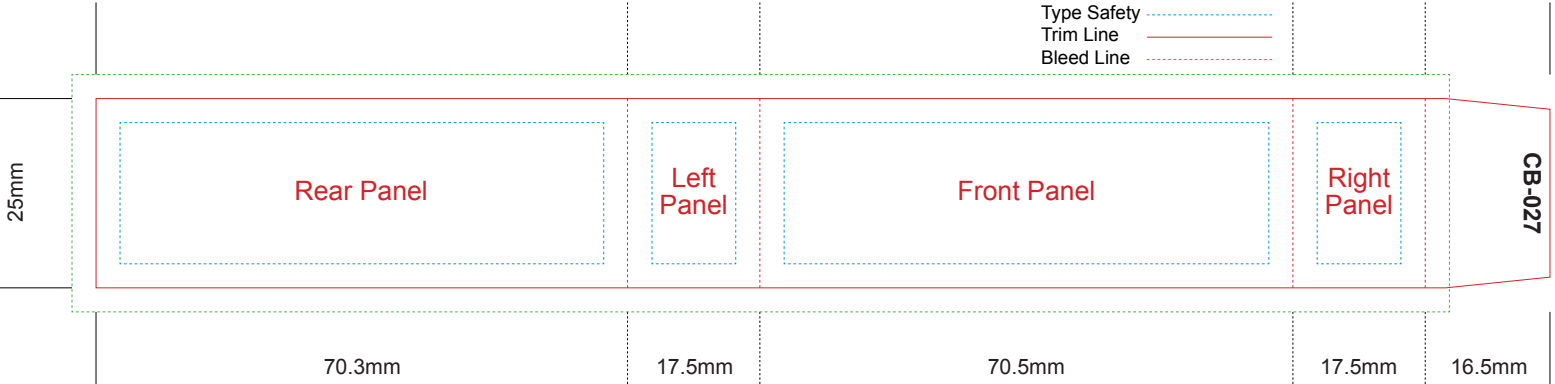
Type Safety
Trim Line
Bleed Line
25mm
Rear Panel
Left Panel
Front Panel
Right Panel
CB-027
70.3mm
17.5mm
70.5mm
17.5mm
16.5mm